LL5005 BRASS Y STRAINER

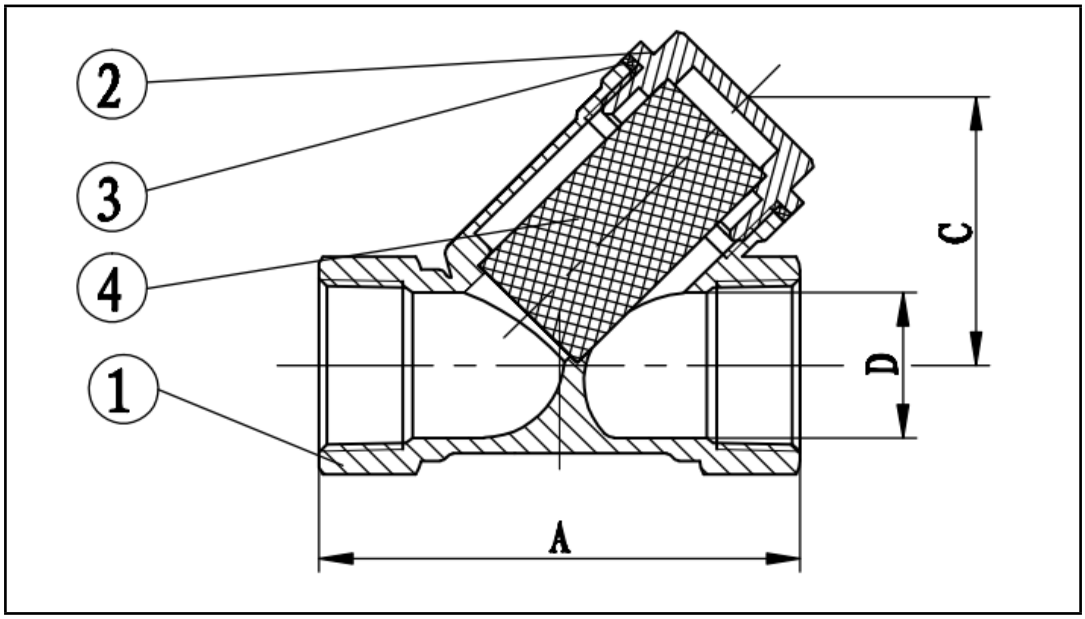

NO	Parts	Material
1	Body	Brass
2	Bonnet	Brass
3	Seal	PTFE
4	Strainer	Stainless Steel

Brass Y Strainer : 24 mesh

- Suitable for domestic water services, heating and air-conditioning plants, compressed air systems.

- minimum and maximum working temperature: -10°C, 80°C.

- Threads : ISO228 (equivalent to DIN259 and BS2779)

Dimension:mms	1/2”	3/4”	1”	1.1/4”	1.1/2”	2”	2.1/2”	3”	4”
A	56.5	69	76.5	96	105	125	134.5	156	181.5
C	32.5	36	40.5	52.5	61.5	75	85	101	123
D	18	22.5	26	36	42.5	54	65	76	97
PN	16	16	16	16	16	16	16	16	16